PD Single 5-9/16 Fixed Sidelite with Renovation Sill Cross Section

Vertical

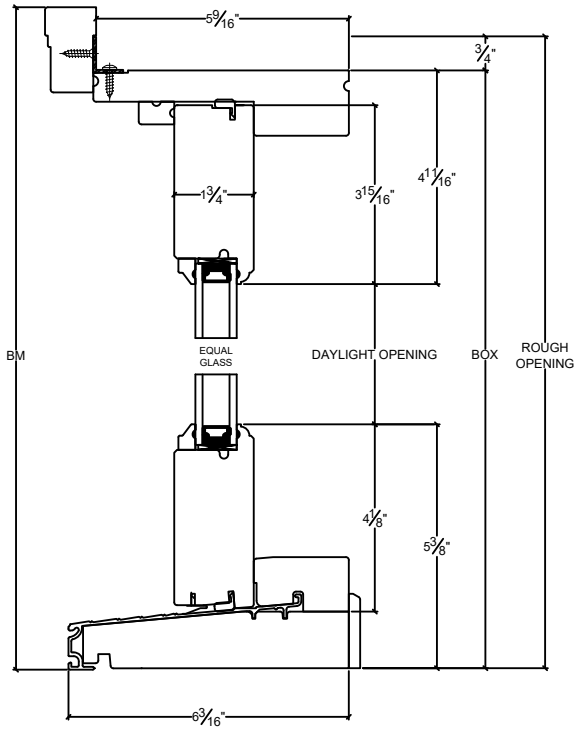

Horizontal

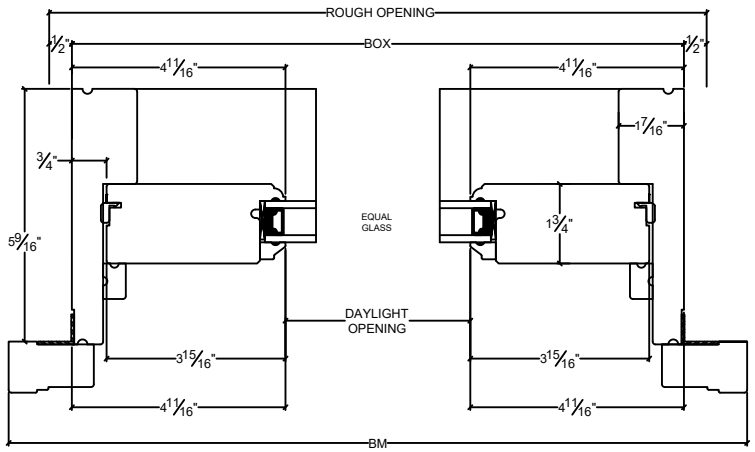

NORWOOD
WINDOWS & DOORS

PD Single 5-9/16 Fixed Sidelite with Renovation Sill Cross Section

Vertical

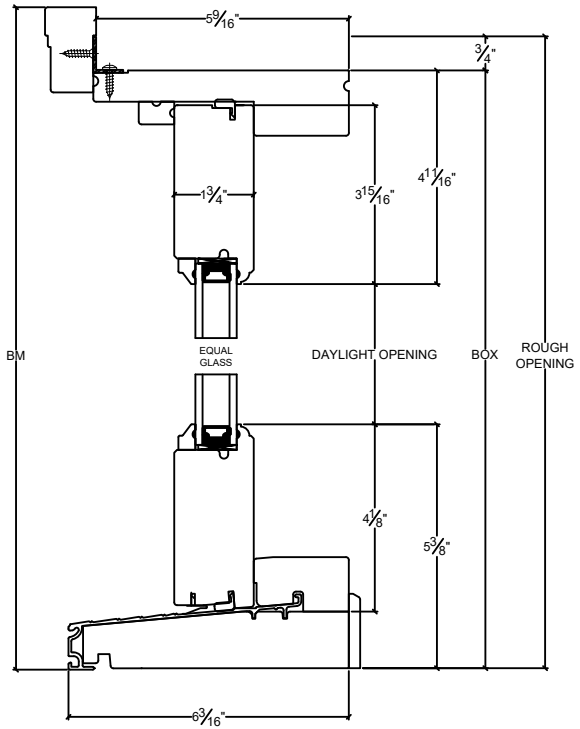

Horizontal

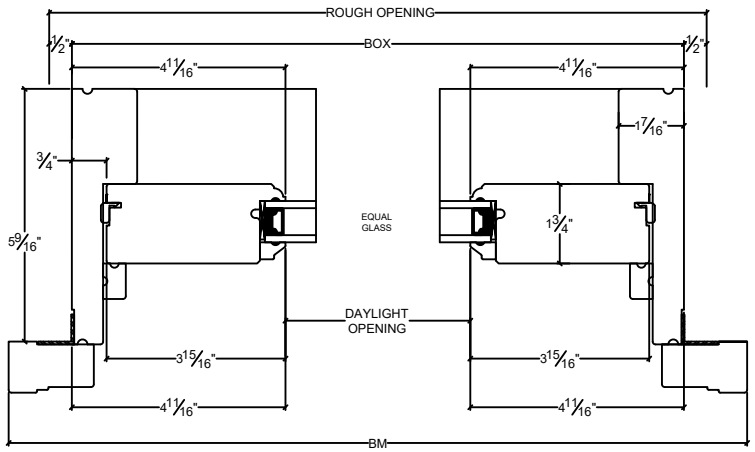

NORWOOD
WINDOWS & DOORS